DATA SHEET 数据表

Revise History 修订记录

Rev.版本	Descriptions描述	Date日期	Page页
1.0	-	23-10-2009	-
2.0	Renew form续订表格	15-12-2015	-
2.1	Renew form续订表格	10-11-2018	-
2.2	Renew form续订表格	27-12-2021	-
2.3	Renew form续订表格	23-10-2023	-
2.4	Renew form续订表格	10-10-2024	-

Contains trade secret information which is the property of Ekinglux and shall not be made available to, or copied or used by anyone outside Ekinglux without its written authorization. Copyright©2021 Ekinglux Optoelectronics Co., Ltd. All rights reserved.
包含属于亿晶源光电财产的商业秘密信息，未经亿晶源光电书面授权，不得向亿晶源光电以外的任何人提供、复制或使用。版权所有©2024亿晶源光电有限公司保留所有权利。

Features 特征

- Long operating life. 使用寿命长.
- Wide Viewing Angle. RoHS Compliant.宽视角.符合 RoHS.
- Moisture sensitivity level: 5a.湿度敏感性等级:5a.

Application 应用

- Indoor decorative lights. Contour light.Backlight and status display.室内装饰灯.轮廓灯.背光及状态显示.

Part Number 产品型号	LED Dice Material LED芯片材质	Emitted Color 发光颜色	Lens Color 胶体形态
E6Z5050RGBC4-M181SY-512	AlGaInP-InGaN	Full-color	Water Clear

IC Electrical characteristics IC 电气特性(Unless otherwise specified Vdd=5V,Ta=25°C)

Parameter 参数	Symbol 符号	Min. 最小值	Typ. 中间值	Max. 最大值	Unit 单位
Chip input voltage 芯片输入电压	V_{DD}	3.0	5.0	7.5	V
R/G/B output port withstand voltage R/G/B 输出端口耐压	V_{DS}	8.5	9.0	9.5	V
R/G/B output driving current R/G/B 输出驱动电流	I_O	9.6	12.0	14.4	mA
High level input voltage 高电平输入电压	V_{IH}	0.7VDD	0.9VDD	VDD	V
Low level input voltage 低电平输入电压	V_{IL}	0	0.1VDD	0.3VDD	V
DOUT ability to pull current DOUT 拉电流能力	I_{DOH}		15.0		mA
DOUT current filling capability DOUT 灌电流能力	I_{DOL}		30.0		mA
PWM frequency PWM 频率	f_{PWM}	3.0	4.0	5.0	KHZ
Static power consumption 静态功耗	I_{DD}	0.40	0.65	0.90	mA

Notes 备注:

1. Electrical operating parameters define the DC and AC parameters of a device within its operating range and under testing conditions that ensure specific performance indicators. For parameters without given upper and lower limits, this specification does not guarantee their accuracy, but their typical values reasonably reflect device performance.电气工作参数定义了器件在工作范围内并且在保证特定性能指标的测试条件下的直流和交流电参数。对于未给定上下限值的参数，该规范不予保证其精度，但其典型值合理反映了器件性能。

2. The minimum and maximum parameter ranges in the specification sheet are guaranteed by testing, while typical values are guaranteed by design, testing, or statistical analysis.规格书的最小，最大值参数范围由测试保证，典型值由设计，测试或统计分析保证。

Absolute Maximum Ratings 绝对最大额定值(Ta=25℃)

Parameter 参数	Symbol 符号	Range 范围	Unit 单位
Logic power supply voltage 逻辑电源电压	V_{DD}	3.0~7.5	V
R/G/B output port withstand voltage R/G/B 输出端口耐压	V_{DS}	9.0	V
Logic input voltage 逻辑输入电压	V_I	-0.5~5.5	V
Electrostatic Discharge (HBM) 正向电流	ESD	5000	V
Operating Temperature Range 工作温度	Topr	-40~+85	°C
Storage Temperature Range 贮存温度	Tstg	-40~+90	°C

Notes 备注: Exceeding the maximum limit, the chip may be damaged. Working within the limit parameter range, the device functions normally, but it is not fully guaranteed to meet individual performance indicators.超出最大极限值，芯片有可能损坏。在极限参数范围内工作，器件功能正常，但并不完全保证满足个别性能指标。

Function Description 功能说明

The chip adopts a single line communication method and sends signals using a zeroing code. After the chip is powered on and reset, it receives data from the DIN terminal. After receiving enough 24 bits, the DOUT port starts forwarding data to provide input data for the next chip. Before forwarding, the DOUT port was kept low. At this point, the chip will not receive new data. The three PWM output ports of the chip, OUTR, OUTG, and OUTB, will emit signals with different duty cycles based on the received 24 bit data, with a frequency of 4kHz. If the DIN input signal is a RESET signal, the chip will send the received data to the display. After the signal ends, the chip will receive new data again. After receiving the starting 24 bit data, it forwards the data through the DOUT port. Before receiving the RESET code, the original outputs of the OUTR, OUTG, and OUTB pins remain unchanged. When receiving a low-level RESET code of more than 80us, the chip will output the pulse width of the 24bit PWM data it just received to the OUTR, OUTG, and OUTB pins.

The chip adopts automatic shaping and forwarding technology, so that the number of cascades of the chip is not limited by signal transmission, only by the requirement of screen refresh speed.

芯片采用单线通讯方式，采用归零码的方式发送信号。芯片在上电复位以后，接收 DIN 端打来的数据，接收够 24bit 后，DOUT 端口开始转发数据，为下一个芯片提供输入数据。在转发之前，DOUT 口一直拉低。此时芯片将不接收新的数据，芯片 OUTR、OUTG、OUTB 三个 PWM 输出口根据接收到的 24 bit 数据，发出相应的不同占空比的信号，该信号频率为 4kHz。如果 DIN 端输入信号为 RESET 信号，芯片将接收到的数据送显示，芯片将在该信号结束后重新接收新的数据，在接收完开始的 24bit 数据后，通过 DOUT 口转发数据，芯片在没有接收到 RESET 码前，OUTR、OUTG、OUTB 管脚原输出保持不变，当接收到 80us 以上低电平 RESET 码后，芯片将刚才接收到的 24bitPWM 数据脉宽输出到 OUTR、OUTG、OUTB 引脚上。

芯片采用自动整形转发技术,使得该芯片的级联个数不受信号传送的限制,仅仅受限刷屏速度要求。

Switch characteristics开关特性 (unless otherwise specified, VDD=12V, TA=25 °C)

Parameter 参数	Symbol 符号	Min. 最小值	Typ. 中间值	Max. 最大值	Unit 单位	Test Condition 测试条件
Data transmission rate 数据传输速率	F_{DIN}	-	800	1000	kHz	-
Data latency time 数据延迟时间	T_{PLZ}	-	200	-	ns	D_{IN}→D_{OUT}
Output current conversion time 输出电流转换时间	tr	-	400	-	ns	V_{DS}=1.5V,I_O=12mA
	tf	-	400	-		

Encoding description 编码描述

Sequence chart 序列图

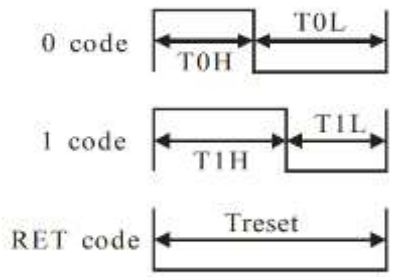

Cascade method 级联法

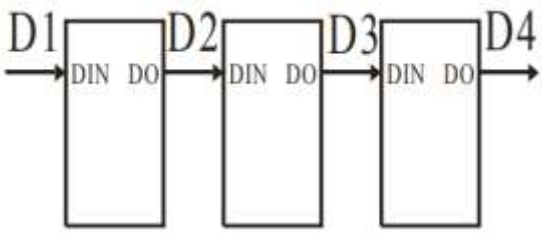

Zeroing Code Data Communication Protocol 归零码数据通讯协议 (unless otherwise specified, VDD=5 V, Ta=25 °C)

Symbol 符号	Parameter 参数	Min. 最小值	Tolerance range 容差范围	Unit 单位
T0H	0 Codes, High level time 0码，高电平时间	0.295	±0.05	us
T0L	0 Codes, Low level time 0码，低电平时间	0.595	±0.05	
T1H	1 Code, High level time 1码，高电平时间	0.595	±0.05	
T1L	1 Code, Low level time 1码，低电平时间	0.295	±0.05	
RES	Reset Code, low level time Reset码，低电平时间	≥80	-	

Protocol Data Format 协议数据格式

G7	G6	G5	G4	G3	G2	G1	G0	R7	R6	R5	R4	R3	R2	R1	R0	B7	B6	B5	B4	B3	B2	B1	B0

Note: Follow the order of GRB to sent data and the high bit sent at first. 按照 GRB 的顺序发送数据,先发送高位.

Input data streams for each chip (taking 3 chips as an example) 各芯片输入数据流（以3颗芯片为例）

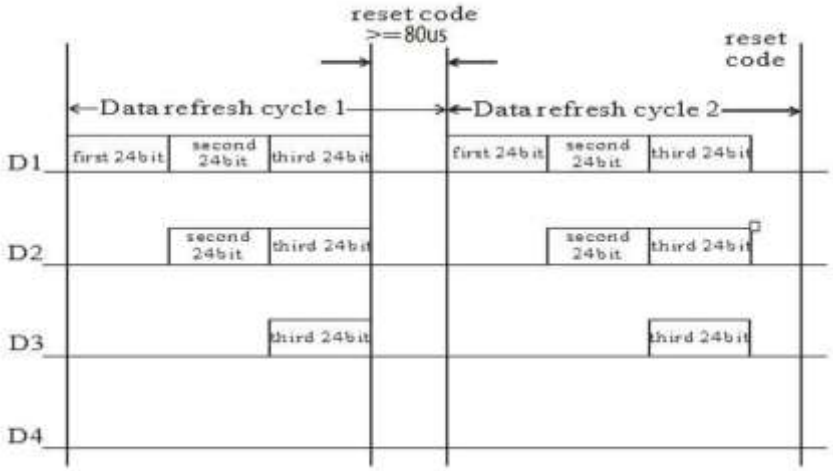

Note: The data of D1 is send by MCU,and D2, D3, D4 through pixel internal reshaping amplification to transmit

D1 的数据由 MCU 发送，D2、D3、D4 通过像素内部整形放大进行传输

Typical application circui 典型应用电路

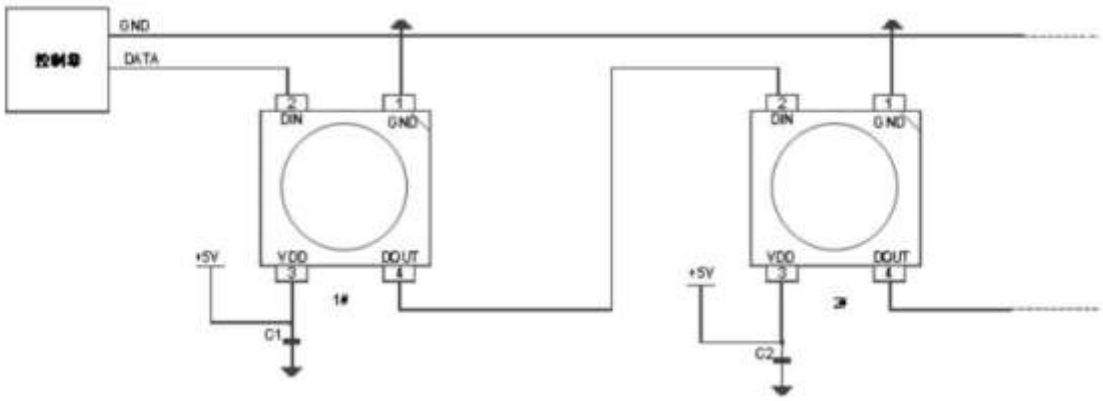

In the above application diagram, C1 and C2 are 100nf/50V ceramic capacitors 以上应用图中，C1、C2 为 100nF/50V 瓷片电容

Built-in LED parameters 内置LED参数

Luminous color 参数	Main wavelength 波长	Luminous Intensity 亮度	Operating Current 工作电流	Test Condition 测试条件
R	620-630	300-800	12	DC5V
G	515-525	700-1200	12	DC5V
B	465-475	100-500	12	DC5V

Optical & Electrical Characteristics Curves 光电特性曲线

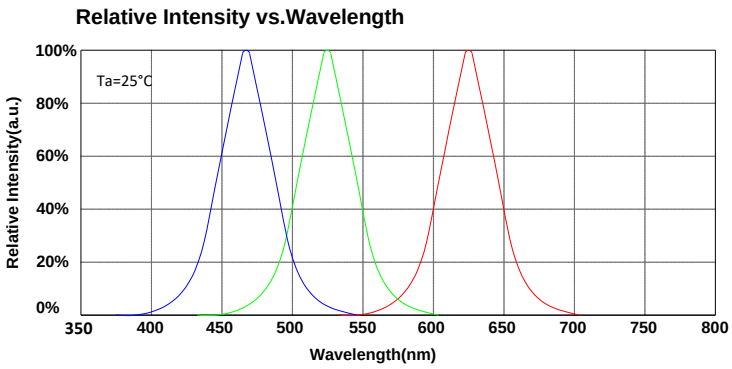

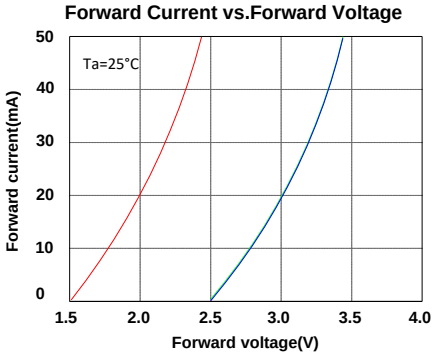

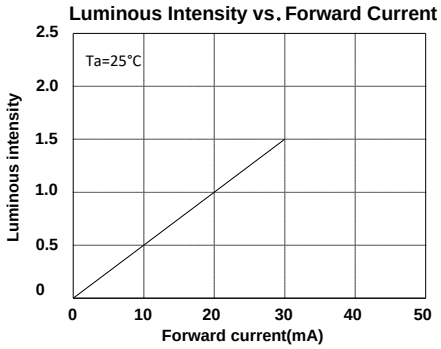

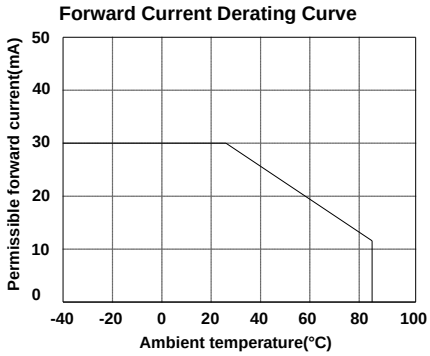

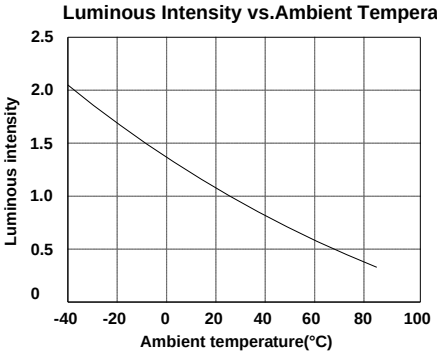

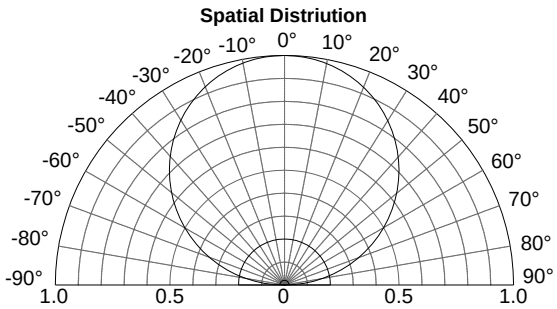

Package Dimension 封装尺寸 (Unit:mm,Tolerance: ±0.20mm 单位:mm,公差:±0.20mm)

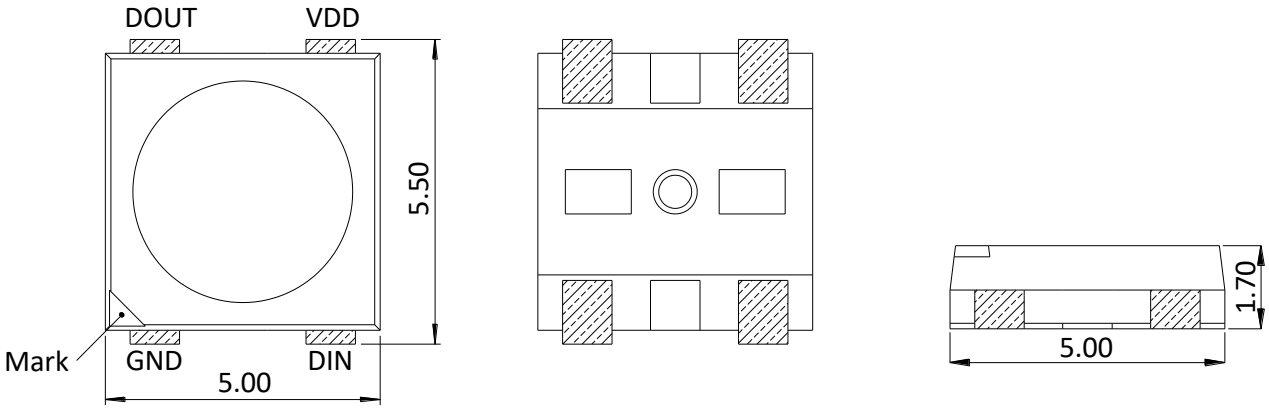

Recommended Soldering Pad Design 推荐焊盘设计(Unit:mm,Tolerance: ±0.10mm 单位:mm,公差:±0.10mm)

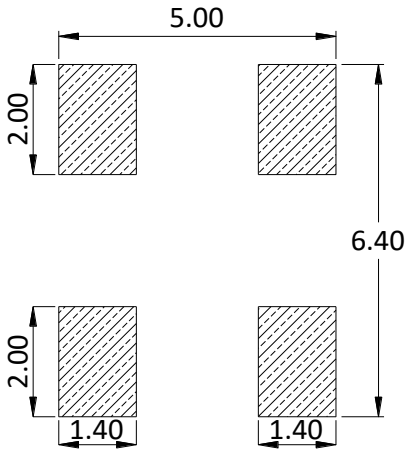

Carrier Tape Dimensions 载带尺寸(Unit:mm,Tolerance: ±0.10mm 单位:mm,公差:±0.10mm)

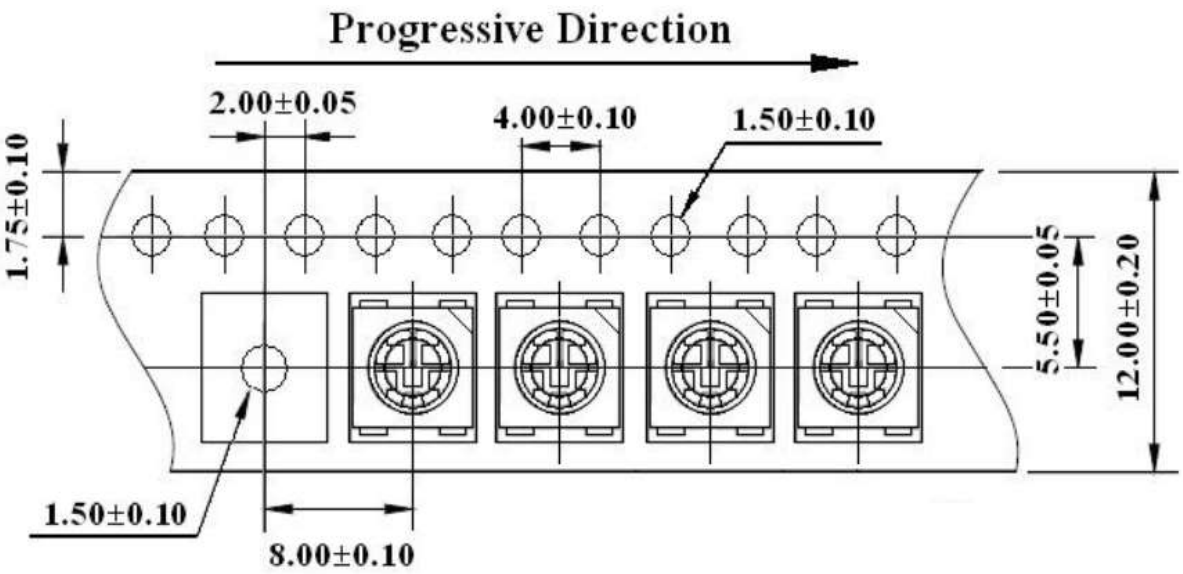

●Loaded quantity 1000 pcs per reel. 每个卷轴装载1000个。

Reel Dimensions 卷轴尺寸(Unit:mm,Tolerance: ±0.25mm单位:mm,公差:±0.25mm)

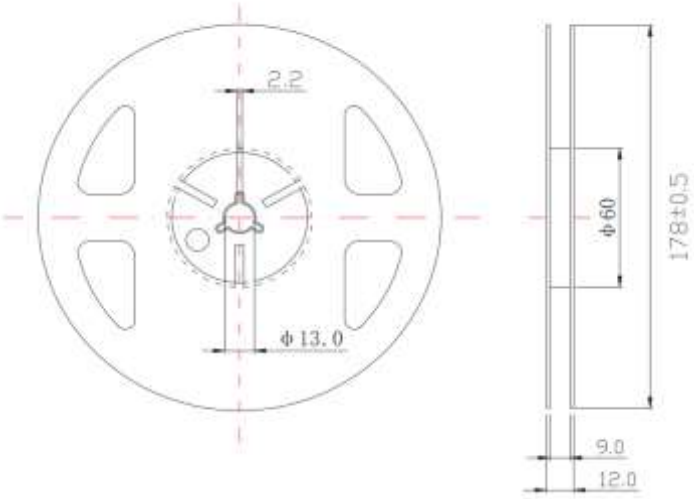

Packaging method 包装方法

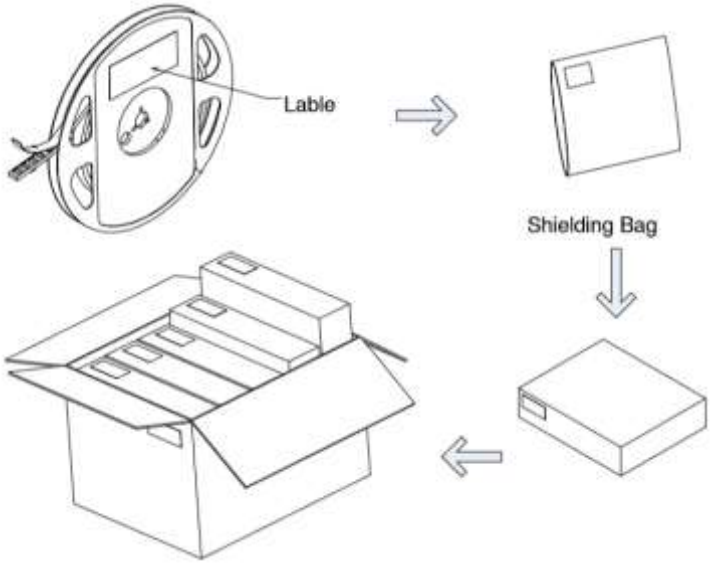

Label Style 包装样式

SMT Reflow Soldering Instructions 回流焊说明

Pb-free solder temperature profile 无铅焊温度曲线

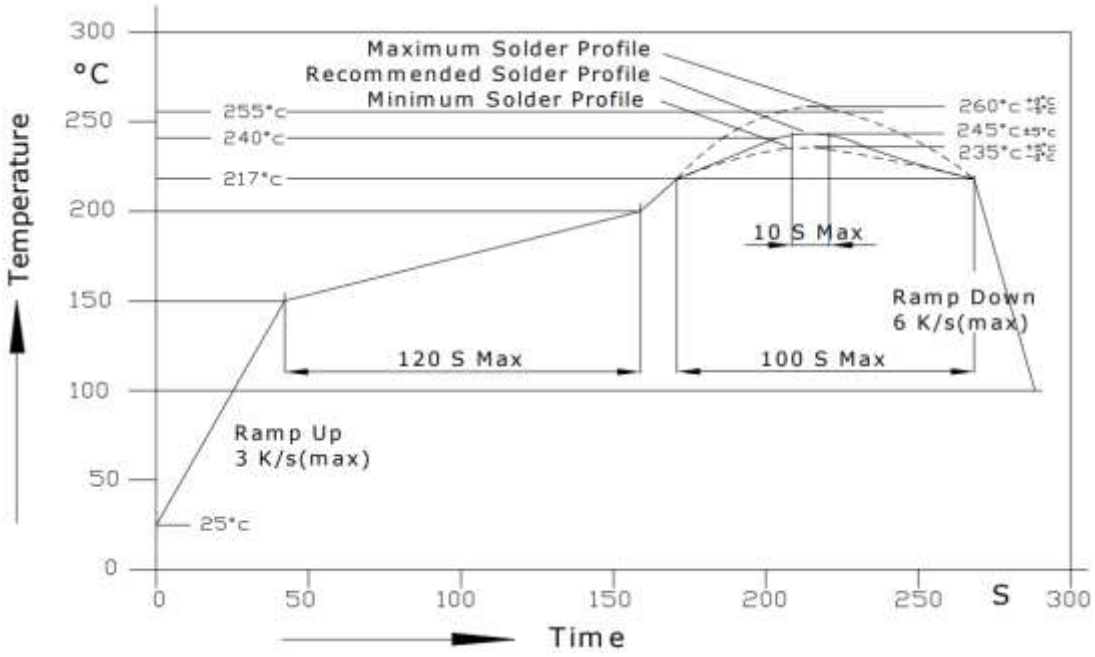

●Reflow soldering should not be done more than two times. 回流焊接不应超过两次.

●When soldering, do not put stress on the LEDs during heating. 焊接时,加热时不要对 LED 施加压力.

●After soldering, do not warp the circuit board. 焊接后,不要扭曲电路板.

●Recommended soldering conditions: 推荐焊接条件:

Reflow soldering		Soldering iron	
Pre-heat	150~200°C	Temperature	300°C Max.
Pre-heat time	120 sec. Max.	Soldering time	3 sec. Max.
Peak temperature	260°C Max.		(one time only)
Soldering time	10 sec. Max.(Max. two times)		

Precautions 注意事项

1. Storage 储存：

●Moisture proof and anti-electrostatic package with moisture absorbent material is used, to keep moisture to aminimum.

防潮防静电包装采用吸湿材料,使水分保持在最低限度.

●Before opening the package, the product should be kept at 30°C or less and humidity less than 60% RH, and beused within a year. 打开包装前,产品应保持在 30℃或以下,湿度小于 60%RH,并在一年内使用.

●After opening the package, the product should be stored at 30°C or less and humidity less than 10%RH. It is recommended that the product be operated at the workshop condition of 30°C or less and humidity less than 60%RH.

打开包装后,产品应储存在 30℃或以下,湿度小于 10%RH 的环境中.建议在 30℃及以下,湿度低于 60%RH 的车间条件下操作。

●If the moisture absorbent material has fade away or the LEDs have exceeded the storage time, baking treatment should be performed based on the following condition: (70±5) °C for 24 hours.

如果吸湿材料已经褪色或 LED 已经超过储存时间,则应根据以下条件进行烘烤处理:（70±5）℃,持续 24 小时.

2. Static Electricity 静电：

●Static electricity or surge voltage damages the LEDs. Damaged LEDs will show some unusual characteristic such as the forward voltage becomes lower, or the LEDs do not light at the low current. All devices, equipment and machinery must be properly grounded. At the same time, it is recommended that wrist bands or anti-electrostatic gloves, anti-electrostatic containers be used when dealing with the LEDs.

静电或浪涌电压会损坏 LED,损坏的 LED 将显示一些不寻常的特性,例如正向电压变低,或者 LED 在低电流下不亮.所有装置、设备和机械必须正确接地.同时,建议在处理 LED 时使用腕带或防静电手套、防静电容器.

3. Vulcanization 硫化：

●LED curing is due to sulfur being in bracket and the +1 price of silver in the chemical reaction generated Ag2S in the process. It will lead to the capacity of reflecting of silver layer reducing, light color temperature drift and serious decline ,seriously affecting the performance of the product.So we should take corresponding measures to avioding vulcanization, such as to avoid using sulphur volatile substances and keeping away from high sulphur content of the material.

LED 固化是由于硫的存在,在化学反应中生成 Ag2S,导致银层的反射能力下降,光色温漂移和严重性能下降.因此,我们应该采取相应的措施避免硫化,比如避免使用挥发性硫化物,远离高硫含量的材料.

4. Handling Precautions 搬运注意事项:

● Handle the component along the side surfaces by using forceps or appropriate tools.

使用钳子或适当的工具沿着侧面处理部件.

●Do not directly touch or handle the epoxy resin lens surface. It may damage the internal circuitry.

请勿直接触摸或处理环氧树脂镜片表面,它可能会损坏内部电路.

●Do not stack together assembled PCBs containing exposed LEDs. Impact may scratch the epoxy resin lens or damagethe internal circuitry.

不要将组装好的含有暴露LED的PCB堆叠在一起,撞击可能划伤环氧树脂透镜或损坏内部电路.